Article number: 02 180 06 99

# Wash basin tap MODUS EH-T HD-M - High pressure mixed water, ThermoProtect cartridge

Compact single-lever mixer tap with lever.

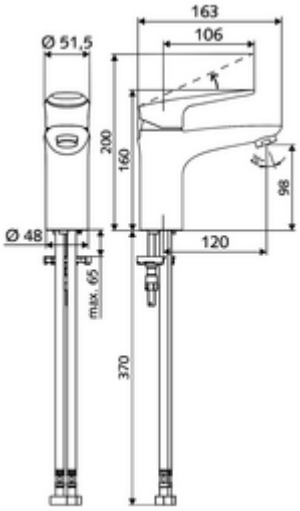


## Scope of delivery

- Single-lever single-hole tap
  - Single-lever mixer
  - Ceramic cartridge with temperature lock 38° C, scald protection in case of cold water supply failure
  - Aerator
- 2 flexible Clean-Fix S connection hoses, G 3/8 IG x 440 mm, with integrated backflow preventer (EN 1717: EB-type) and pre-filter
- Fastening material for wash basin installation

## Technical data

- - Noise class: II, at 100% flow: max. 5 l/min pressure independent
- Flow pressure: 1.0 - 5.0 bar
- Max. Resting pressure: 8 bar
- Max. operating temperature: 70 °C
- Max. outlet temperature: 38 °C
- Connection: 2x G 3/8 IG
- Material: Actuation Die-cast zinc; Housing Brass, conform to German drinking water regulations
- Surface: Chrome
- Certificates: P-IX 29002/IO, Belgaqua
- Noise class: I
- Flow class: O

## Delivery data

- Weight: 1,73 kg/Piece
- Packing unit: 1

## Recommended associated articles

| | |
|---|---|
| Flow regulator set LEED 1.3 l | Article no: 28 931 06 99 or |
| Aerator set 3.0 l/min pressure-independent | Article no: 28 932 06 99 or |
| Aerator max. 5.7 l/min pressure-independent, theft-proof | Article no: 02 121 06 99 or |
| Pressure limiter set | Article no: 28 525 06 99 |
| Wash basin outlet valve OPEN | Article no: 02 002 06 99 or |
| Wash basin outlet valve PUSH OPEN | Article no: 02 000 06 99 or |

## Hint

- Umrüstung auf Bügelhebel MODUS Care EH-T 70 004 06 99 möglich, siehe Ersatzteile.